Operation manual

SNDWAY

数码测距望远镜

DIGITAL RANGEFINDER TELESCOPE



SW-3000B

目　录

中文 ---------- 01~26

English ---------- 27~53

产品执行标准：GB/T 14267-2009



安全条例

初次使用仪器前，请先仔细阅读安全条款和操作指南

⚠ 在使用仪器之前请仔细阅读本手册中的所有操作指南和安全条例，没有按照本手册所指引的操作方法使用仪器有可能会造成仪器的损害、影响测量精度。

⚠ 不要用任何方式自行打开或修理仪器，严禁非法改装或改变仪器激光发射器的性能。请妥善保管仪器，不要放置在儿童可以接触到的地方，避免无关人员的使用。

⚠ 仪器电磁辐射可能对其他设备和装置造成干扰，请不要在飞机或医疗设备附近使用本仪器，不要在易燃、易爆的环境中使用仪器。

⚠ 报废的仪器不可与生活垃圾一同处理，请按国家或者当地的相关法律规定处理报废的仪器。

⚠ 仪器出现任何的质量问题，或对使用仪器有任何疑问时请及时联系当地经销商或仪器厂家，我们将第一时间为您解决。

产品介绍

本激光测距望远镜，是一种工程、高尔夫通用型仪器。全系配备扫描测量功能，可轻松识别远处细小目标，广泛应用于各种场景，如：电线、电线塔，高速公路，市政工程，林业勘察设计，建筑施工、网络规划勘测设计，通讯检修，狙击射击，高尔夫，狩猎等户外各类测量。

产品优势

● 在清晰观察物体的同时，可测量固定或慢速运动物体在一定范围内的距离。具有测量精度高、测距时间短、距离显示直观、耗电低和自动断电等优点。

● 仪器的激光发射功率小、对人眼安全, 不需要配对目标；体积小，重量轻，便携。机内使用可循环充电锂电池供电。

产品特性

- 小巧，轻便，便携；
- 高精度，高速，低功耗；
- 静音操作，自动断电；
- 内置3500mAh可循环充电锂电池；
- 目标锁定功能，方便测量细长目标；
- 高度和水平模式，应用于工程测量；
- OLED自发光屏，无惧环境明暗，屏显清晰可见。

产品概述图

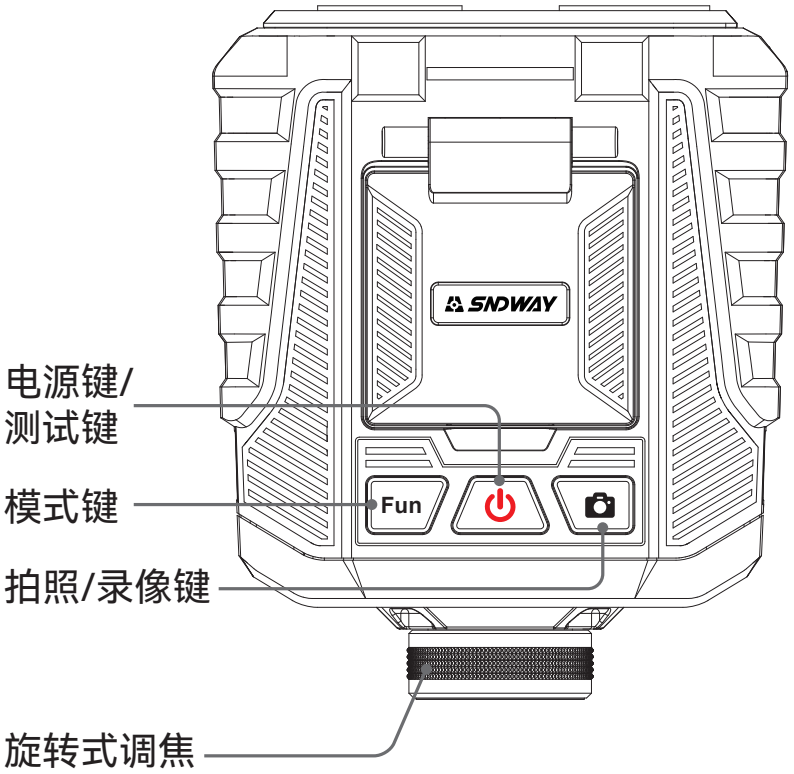
SNDWAY
Fun
电源键/
测试键
模式键
拍照/录像键
旋转式调焦

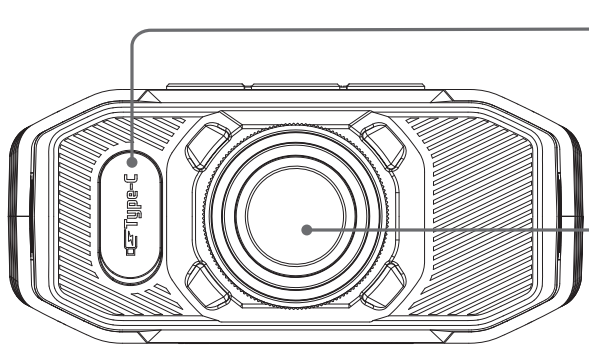
Type-C
充电接口
观测目镜/
取景器

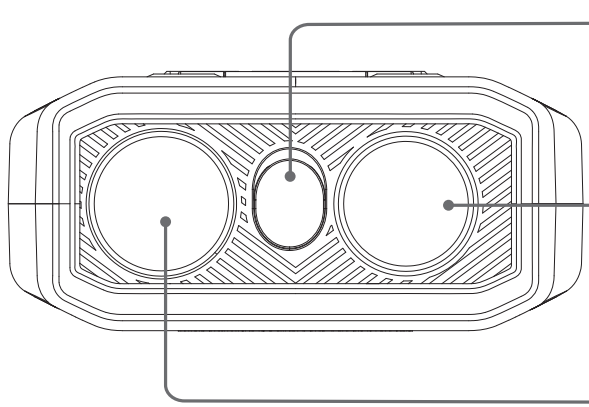
用于通讯
通讯接口为RS232
激光发射物镜
激光接收物镜

技术参数

产品型号	SW-3000B
测量范围	10-3000m, ±(1.0m+Dx0.3%)*
产品大小	144.61x119.85x52.9 mm
产品重量	550g
测量单位	m(Meter), Y(Yard)
反应时间	<1000m (<300ms); 1000-2500m(<500ms); 2500-3000m(<3s)
倍率	7.0X±5%
视场	6.0°±5%
物镜孔径	28mm
目镜孔径	20mm
出瞳直径	4.0±10%mm
视度调节范围	±5°
激光波长	905nm
电池规格	3.7V / 3500mAh Li-ion

满电工作次数	30000
防护等级	IP65
工作温湿度	-10℃~ 50℃; ≤95%RH
存储温湿度	-20℃~ 60℃; ≤85%RH
高度测量功能	有
充电规格	DC 5V 1.5A Type-C
自动关机	3min(默认)，录像与设置等模式为10min

* 最大量程，以浅色建筑物测量为标准。天气、目标大小、表面形状等情况，可能对最大量程产生影响。精度受天气、目标反射条件是否良好，是否有强光干扰等因素影响。
详情参考<注意事项>。

屏显内容图解

1. 十字瞄准靶心
   探索测定目标: 闪烁
   探索测量目标成功: 停止闪烁

2. 目标锁定模式
   未锁定目标 已锁定目标

3. 直线测量模式

4. 震动指示

5. 高度和水平模式:
   显示高度和水平距离
   方位角模式: 测量到目标的距离

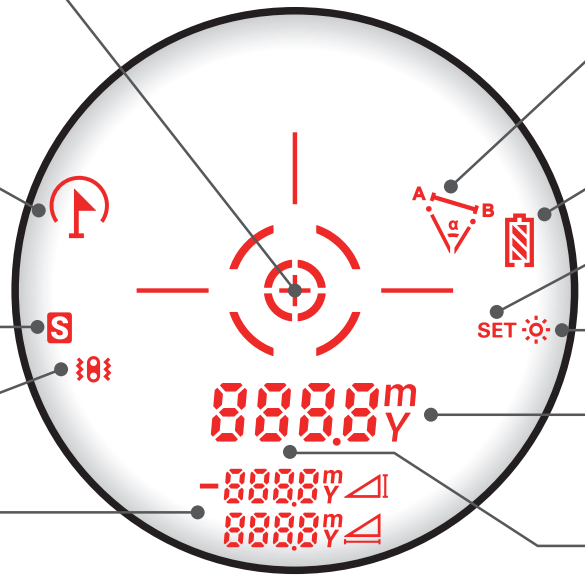

6. 方位角测量模式

7. 电池电量显示

8. 设置模式指示

9. 亮度调整

10. 测量单位[m: 米 Y: 码]

11. 直线距离模式: 显示实际距离
    目标锁定模式: 显示目标距离
    高度和水平模式: 显示实际距离
    方位角模式: 测量两个目标之间的距离

操作说明图解

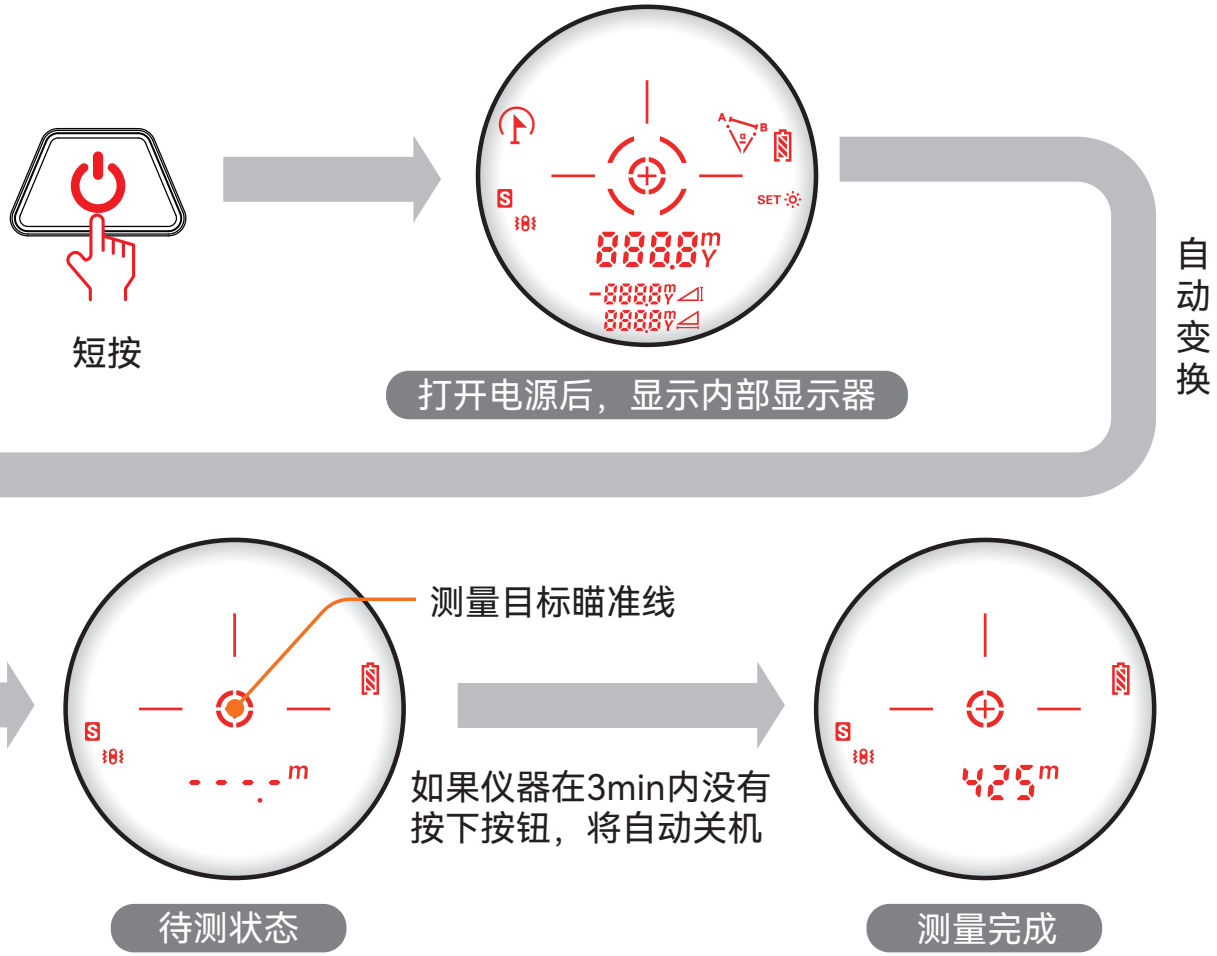
短按
打开电源后，显示内部显示器
自动变换
测量目标瞄准线
如果仪器在3min内没有
按下按钮，将自动关机
待测状态
测量完成

旋转式调焦

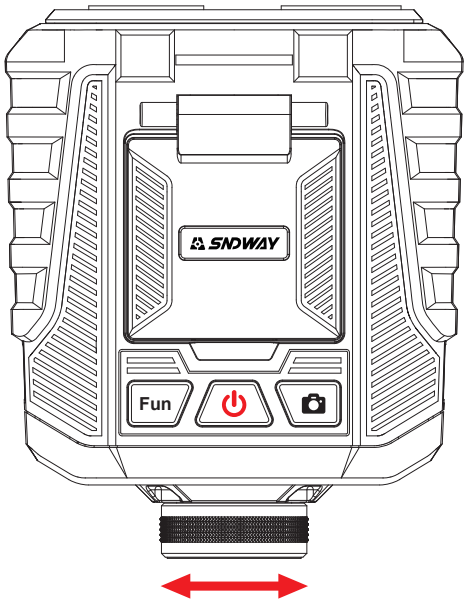

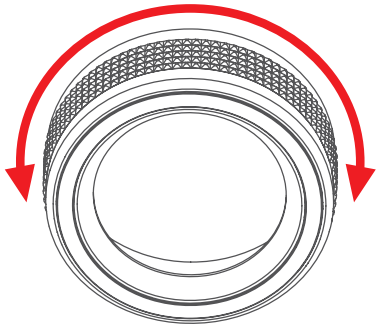

顺着“右”方向旋转适用于近处看不清的用户(如远视眼），顺着“左”方向旋转适用于远处看不清的用户(如近视眼）。通过调节旋钮，使目距和瞳距一致即清晰。

模式选择

短按模式键 Fun 切换模式。

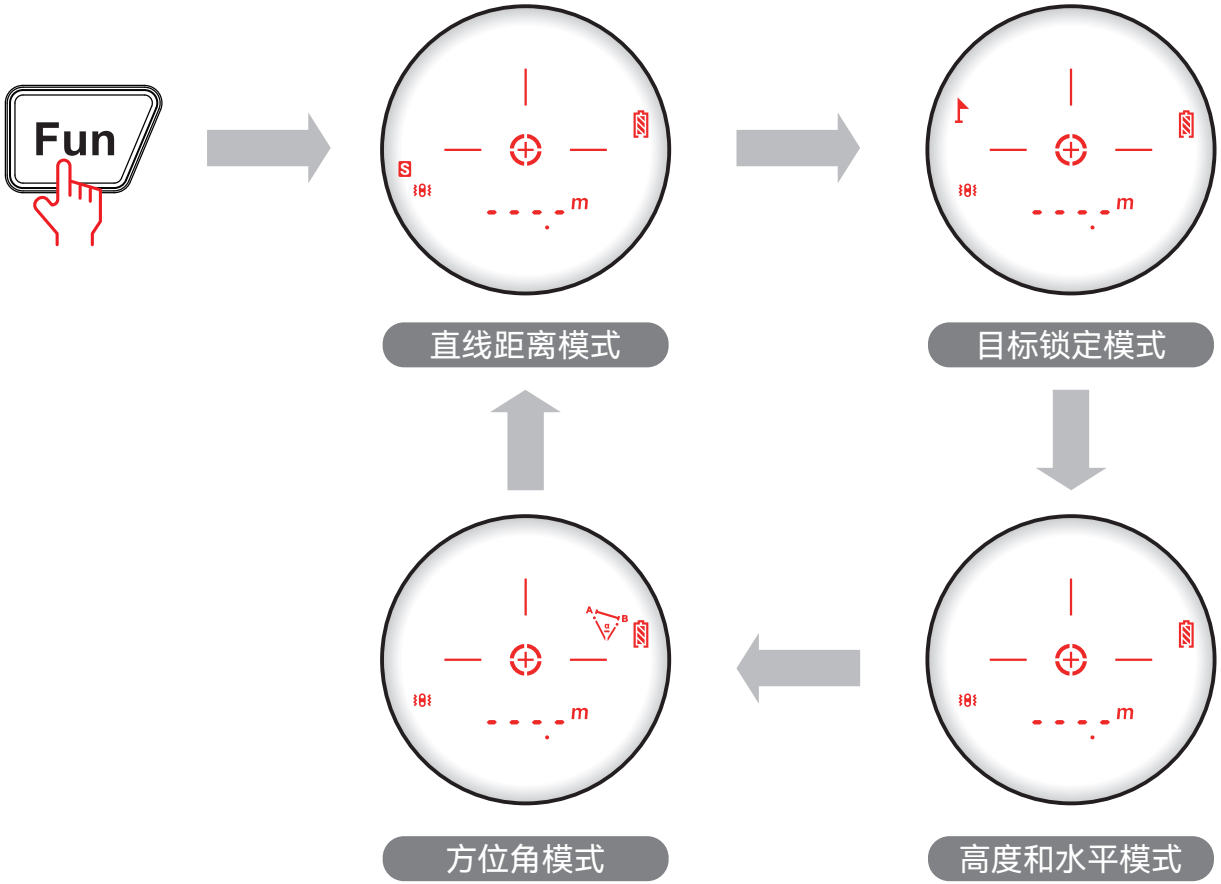

外屏显示示意图：

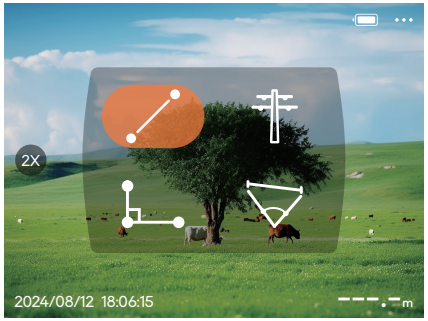

模式选项

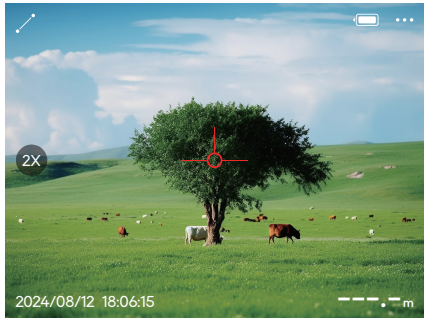

直线距离模式

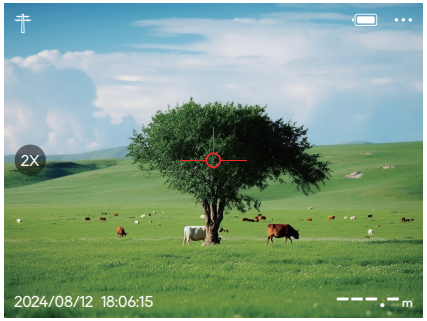

目标锁定模式

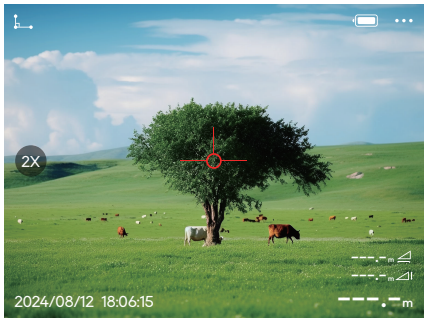

高度和水平模式



方位角模式

单位和振动选择

长按 Fun 键进入设置模式。

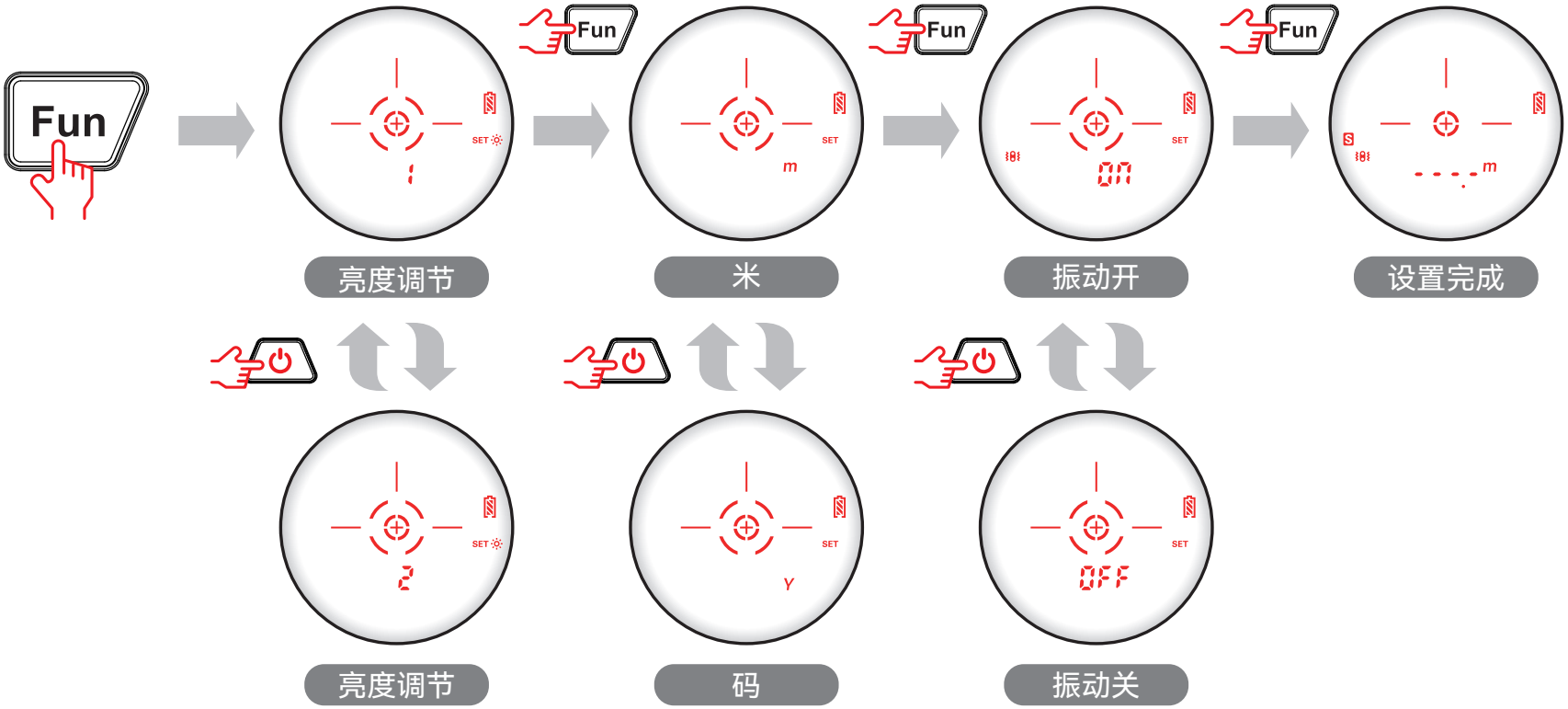

注：1.开启振动模式，仪器测量距离，振动一次，仪器锁定目标，振动两次。

2.关闭振动模式，仪器测量距离，不振动，仪器锁定目标，振动两次。

外屏显示示意图：

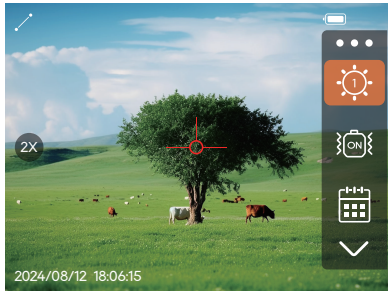

亮度调节

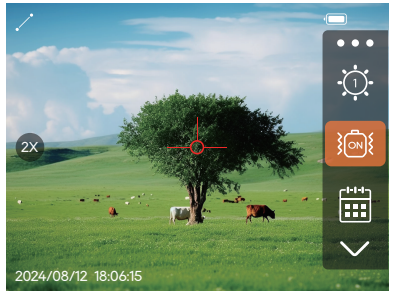

振动开

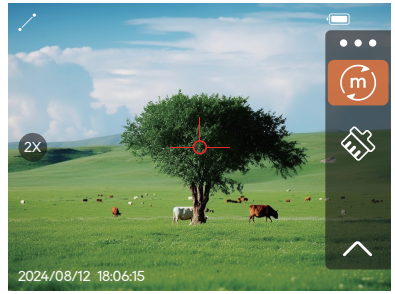

米

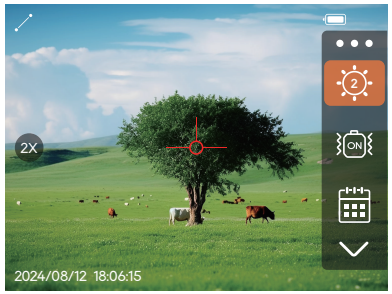

亮度调节

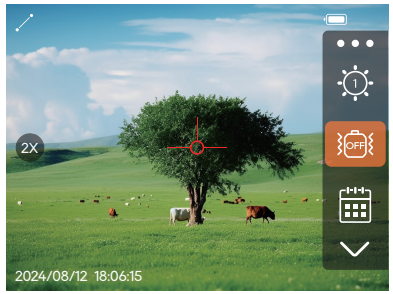

振动关

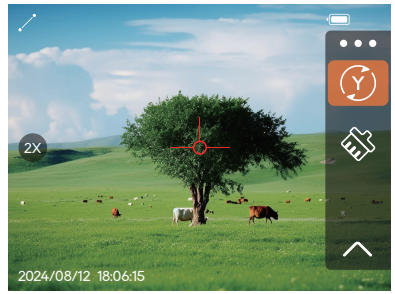

码

直线距离测量

测量直线距离

单次测量：短按测量键  测量一次距离

连续测量：长按测量键  扫描距离，实时显示扫描目标距离。

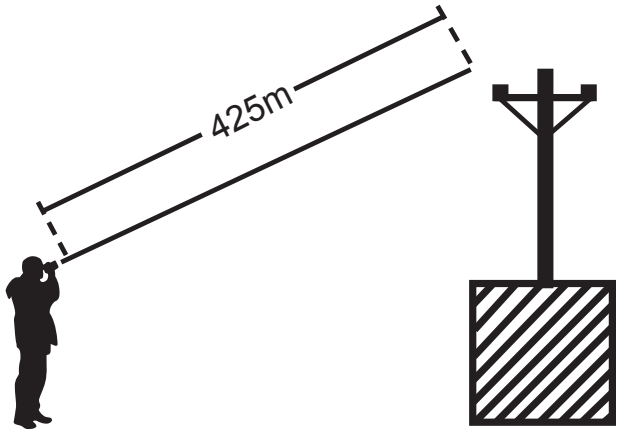

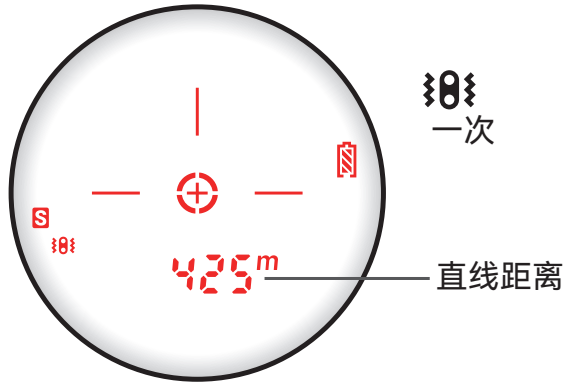

测量结果

外屏显示示意图：

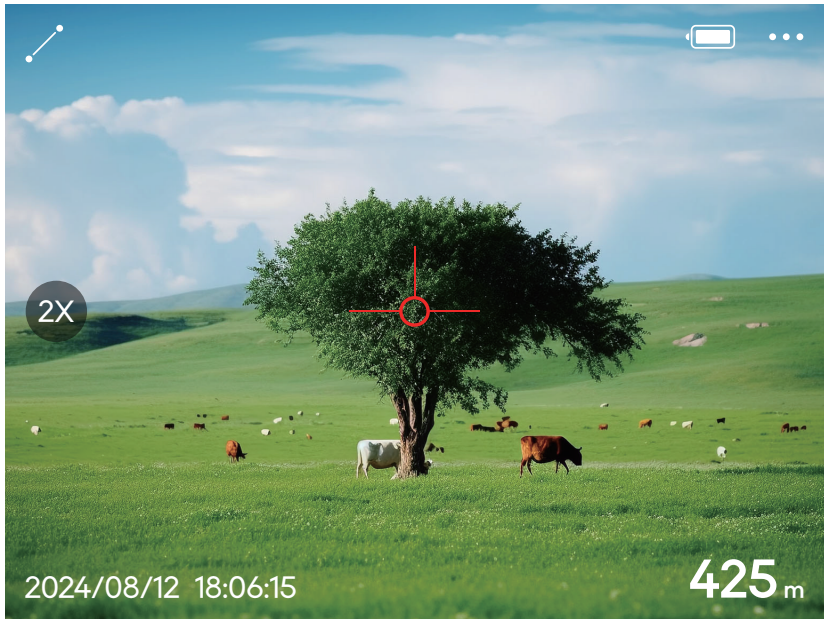

拍照/录像模式

短按 键，进行拍照；长按 键，进行摄像；再次长按 键，停止录像。

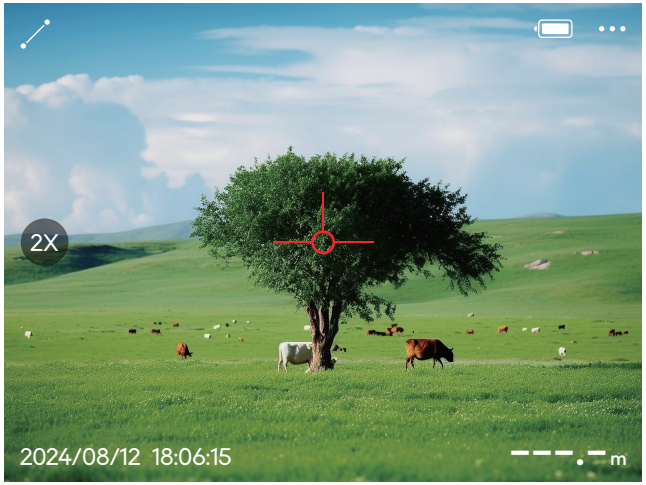

开始拍照

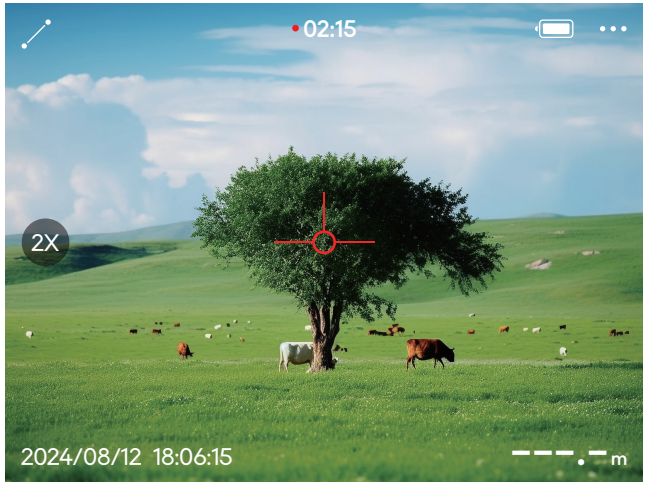

开始摄像

目标锁定

当测量重叠目标时，长按测量键 ，左右缓慢扫描锁定最近的目标。

例如：无法确定测量的距离是旗杆还是其后面的树林，锁定功能将锁定最近的目标——旗杆。

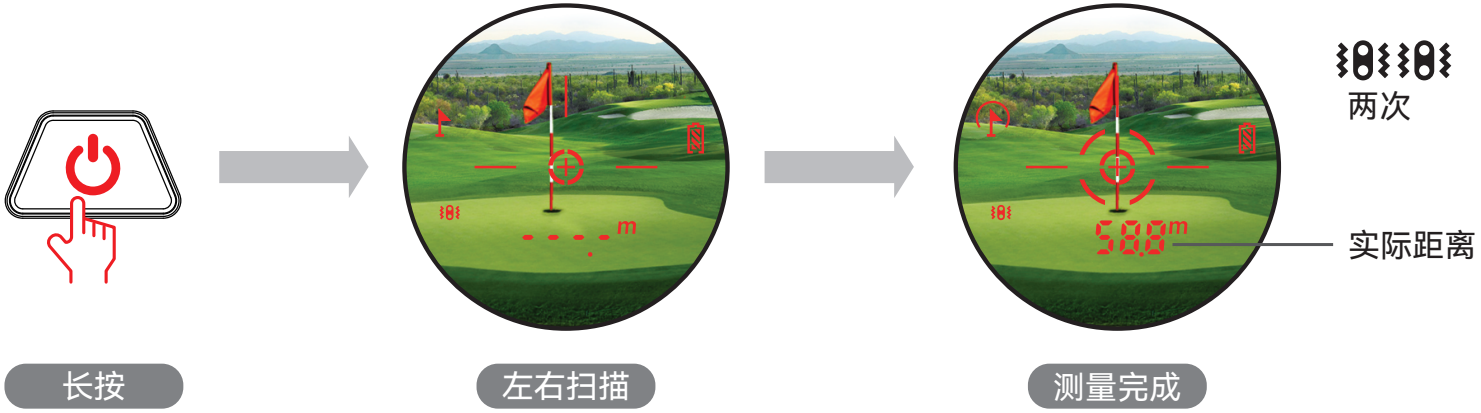

外屏显示示意图：



高度和水平距离

短按测量键  ，显示观测者到目标的相对高度和水平距离。

测量高度和
水平距离

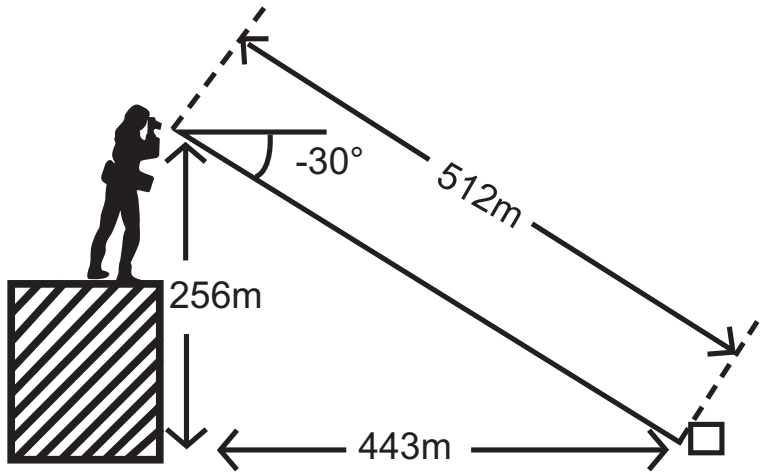

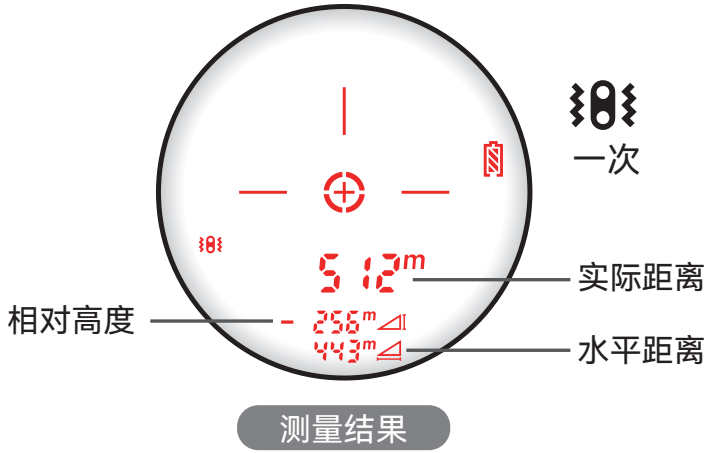

测量结果

外屏显示示意图：

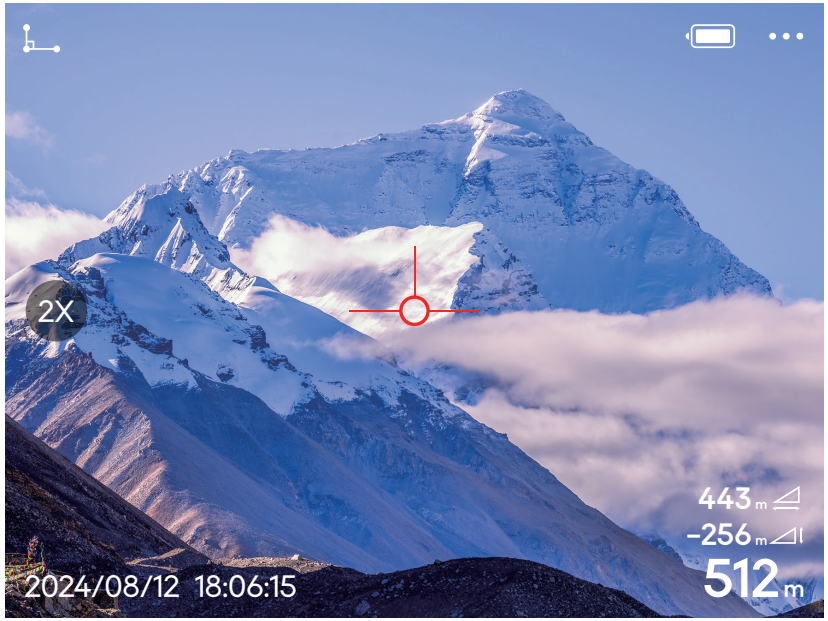

方位角模式

方位角测量模式用于测量两个目标之间的距离，先对着A点测试，再对着B点测试，最后会自动计算出AB之间的距离。

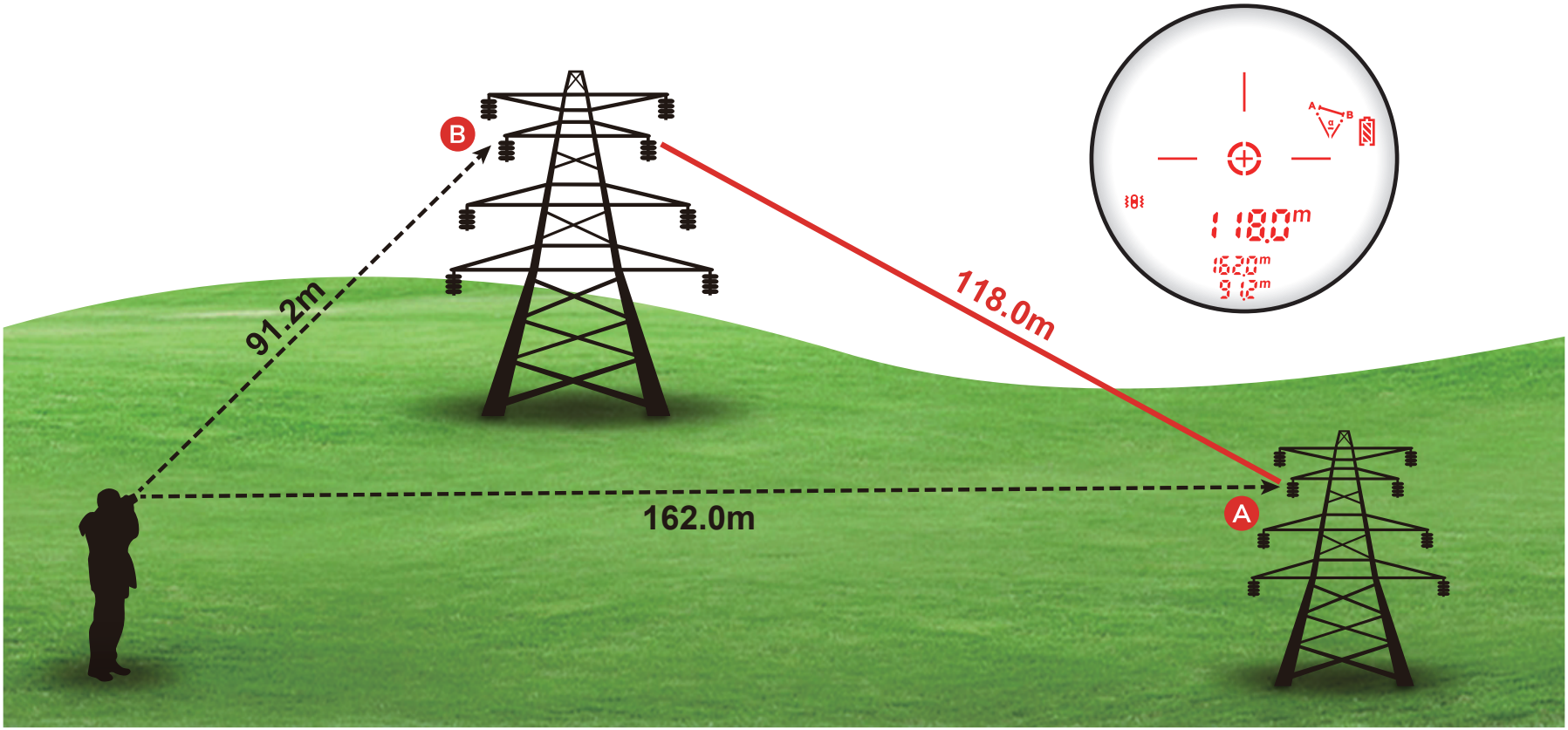

外屏显示示意图：

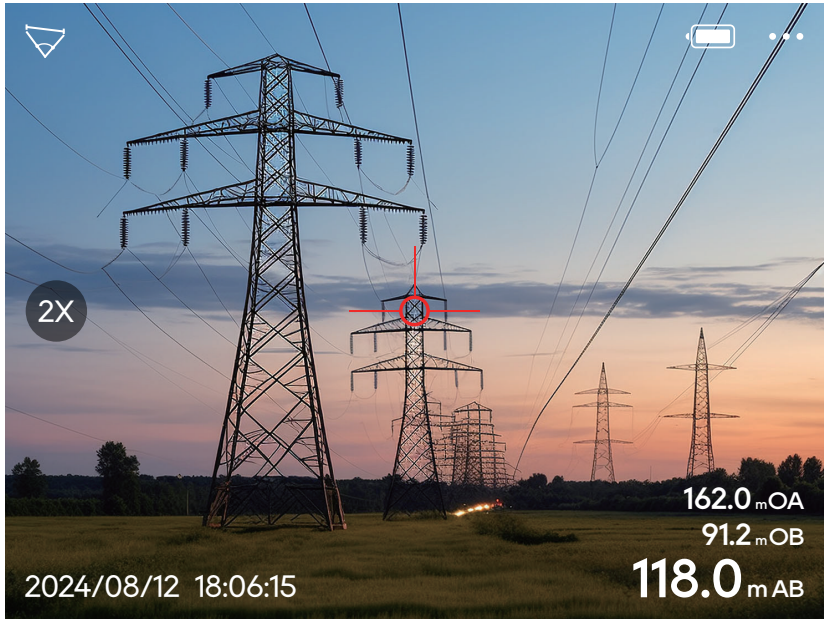

USB连接电脑

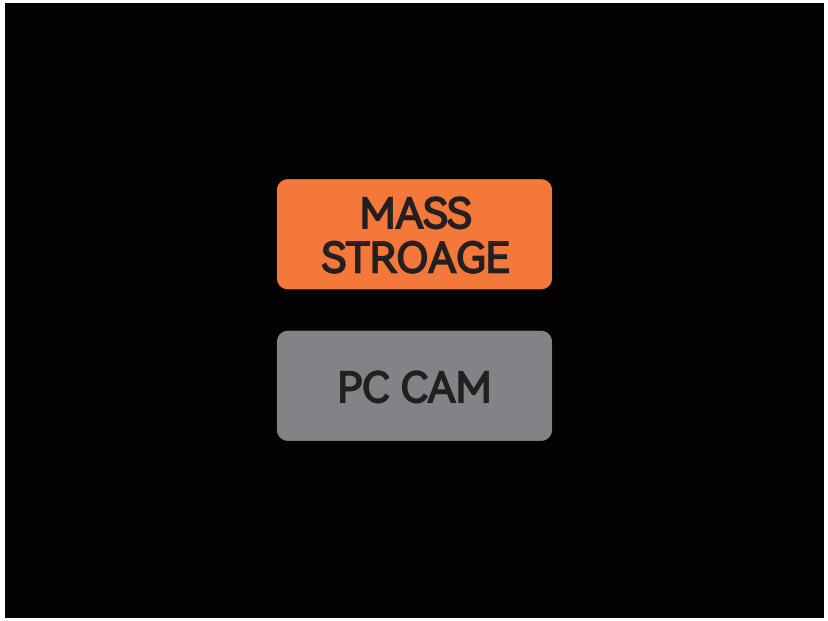

1.通过USB连接电脑进入U盘。

2.通过USB连接电脑进入PCCAM

通讯线定义

通讯方式	RS232
同步方式	异步(应答式)
波特率	115200
数据拉	8
停止位	1
校验位	无
通讯协议	请参考“SW3000A_RS232 通讯开发指南”。
通讯接线	①黑.....GND;　②棕.....RX;　③蓝.....TX;

注意事项

● 多功能测距仪发射出不可见、无损视力的红外脉冲激光，然后将其从选定目标反射回光学接收器中。通过测量每个脉冲激光从测码仪到目标并返回所花的时间，系统采用先进的精确充电电路来即时计算出被测距离。该设备的最大测量范围取决于目标的反射率、颜色、表面光洁度尺寸和实际形状。

下列因素能确保获得最佳测量范围和精度:

- 晴朗天气
- 空气中无任何杂质
- 亮色目标
- 具有高反射面的目标
- 具有光亮外表的目标

下列因素不能确保获得最佳测量范围和精度:

- 黑色目标
- 细小或微型目标
- 强光干扰/猛烈太阳光
- 雪天、雨天或雾天
- 需穿透玻璃测量的目标
- 有漫反射表面的目标
- 动态目标

- 当电池显示  电量不足时，应及时给电池充电合上屏幕，否则测距误差会增大。
- 请勿用手指触摸镜头表面，以免损坏镜头表面的膜层。
- 本机是经过精密仪器精确调校的，请勿随意拆卸，如有损坏，应送专门部门进行维修。
- 请用擦镜布轻轻擦拭镜头，切勿用其他物体擦拭。
- 携带时，应避免碰撞或重压。
- 携带时或使用时，不要使其受到烘烤或腐蚀。
- 存放时应注意防潮，宜存放在干燥、阴凉、通风的地方，防止太阳直射，避免灰尘和温度突变。
- 切忌将本机直接对准太阳或强光源发射，以免损坏机内光敏器件。

包装清单

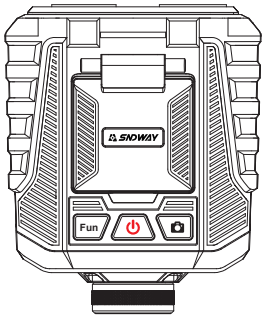

主机



包装盒



布包



用户手册

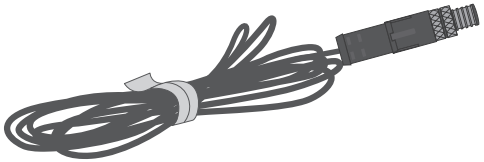

通讯线

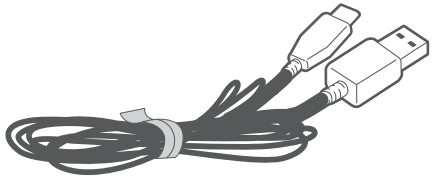

USB Type-C线

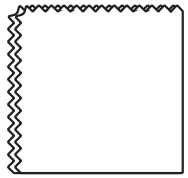

擦拭布

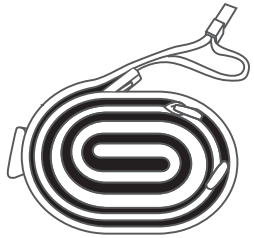

肩带



Safety Regulations

Before using the laser equipment for the first time, please read the safety terms and operating instructions carefully

- Before using the product, read all the operation guides and safety regulations in this manual carefully. If you do not use the product according to the operation methods in this manual, the product may be damaged and the measurement accuracy may be affected.
- Do not open or repair the product in any way, and it is strictly prohibited to illegally modify or change the performance of the product. Take good care of the product, do not place it in the place where children can reach it, and avoid the use of unrelated personnel.
- The electromagnetic radiation of the product may cause interference to other equipment and devices. Please do not use the product near aircraft or medical equipment, and do not use the product in flammable or explosive environments.
- Discarded product cannot be disposed of together with domestic waste. Please dispose of discarded product according to relevant national or local laws and regulations.
- If there are any quality problems or any questions about the use of the product, please contact the local distributor or product manufacturer in time, we will solve the problems as soon as possible.

PRODUCT INTRODUCTION

The laser range finder is a general laser equipment for engineering and golf. The whole system is equipped with scanning ranging function, which can easily identify small distant targets, and it is widely used in various scenes, such as: cables, power towers, highways, municipal engineering, forestry investigation and design, building construction, network planning and survey design, communication maintenance, sniper shooting, golf, hunting and other outdoor measurements.

Advantages

- While users clearly observe the object, the product can measure the distance of fixed or slow-moving objects within a certain range. It has the advantages of high measurement accuracy, short measuring time, intuitive distance display, low power consumption and automatic power off.
- The laser transmission power of the product is small, safe for human eyes, and no matching target is required. A small size and a light weight make the product portable. The product is powered by a rechargeable lithium battery.

Features:

- Small, light weight and portable;
- High precision, high speed and low power consumption;
- Silent operation and automatic power off;
- Built-in 3500mAh rechargeable lithium battery;
- Target locking function for easy measurement of slender targets;
- Height and level mode for engineering measurement;
- OLED self-luminous screen, fearless of environmental light and clearly visible.

PRODUCT OVERVIEW

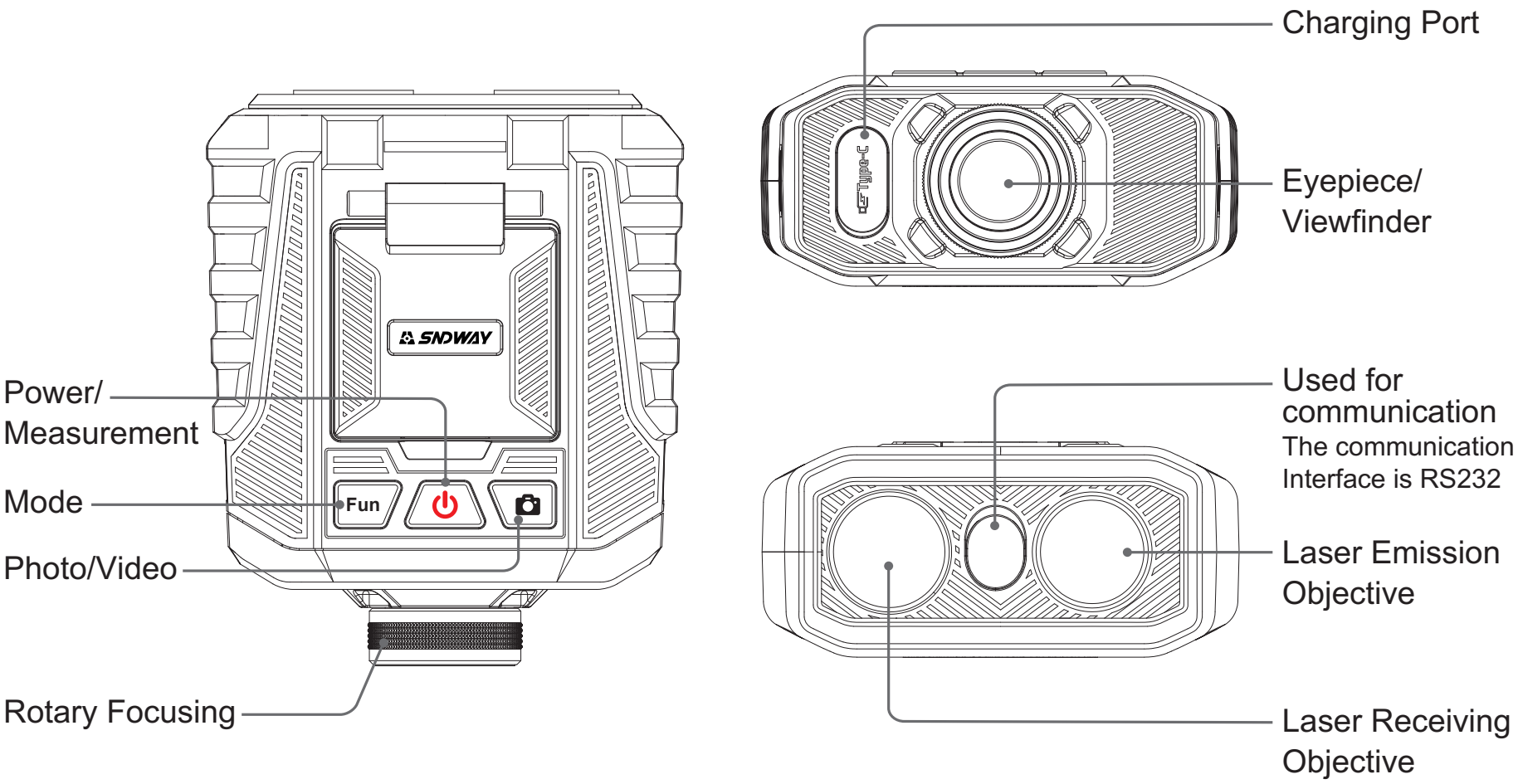

SPECIFICATION

Model	**SW3000B**
Measurement Range	10-3000m, ±(1.0m+Dx0.3%)*
Dimensions	144.61x119.85x52.9 mm
Weight	550g
Measurement Unit	m(Meter), Y(Yard)
Response Time	<1000m (<300ms); 1000-2500m(<500ms); 2500-3000m(<3s)
Magnification	7.0°±5%
Field of View	6.0°±5%
Objective Aperture	28mm
Eyepiece Aperture	20mm
Exit Pupil Diameter	4.0±10%mm
Diopter Adjustment Range	±5°
Laser Wavelength	905nm
Battery Specification	3.7V / 3500mAh Li-ion

Full Charge Operation Times	30000
Protection Class	IP65
Working Temp And Humidity	-10°C~ 50°C; ≤95%RH
Storage Temp And Humidity	-20°C~ 60°C; ≤85%RH
Height Measurement	Yes
Charging Specification	DC 5V 1.5A Type-C
Automatic Power Off	3min (default), 10min (video and setting modes)

* The maximum measuring range is based on the measurement of light-colored buildings. Conditions such as weather, target size, surface shape, etc. can affect the maximum measuring range. The accuracy is affected by factors such as weather, whether the reflection condition of the target is good or not, whether there is strong light interference or not and other factors. For details, see < Precautions >.

SCREEN DIAGRAM

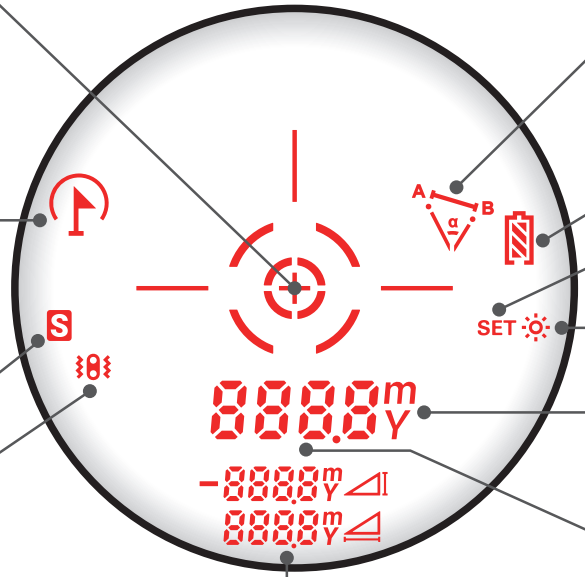

1. Cross Bull's-eye
   Explore And Measure Target:
   Flashing
   Successfully Explore And Measure Target: Stop Flashing
2. Target Locking Mode
   Target is not locked
   Target is locked
3. Linear Measurement Mode
4. Vibration
5. Height And Level Mode:
   displays height and horizontal distance
   Azimuth Mode:
   measures the distance to the target
6. Azimuth Mode
7. Battery Level
8. Mode Setting
9. Brightness Adjustment
10. Measurement Unit
    [m: meter, Y: yard]
11. Linear Distance Mode:
    displays the actual distance
    Target Locking Mode:
    displays target distance
    Height and Level Mode:
    shows the actual distance
    Azimuth Mode:
    measure the distance between two targets

OPERATING INSTRUCTION DIAGRAM



Short press

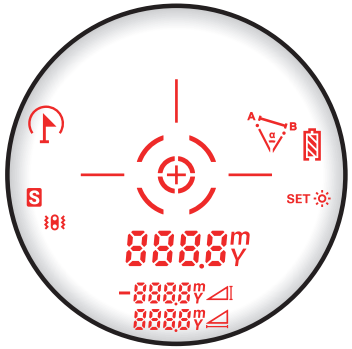

When the power is turned on, the internal displayer is displayed

Automatically switch to

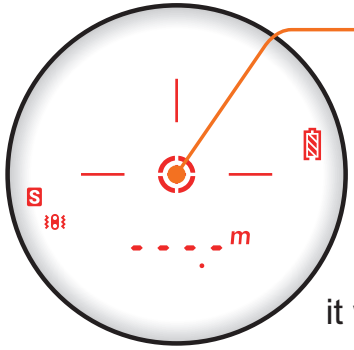

Aiming line of measured target

If users do not press the button within 3 minutes, it will automatically shut down

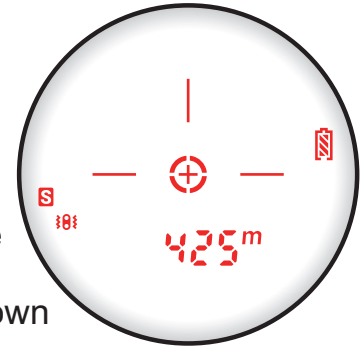

Standby mode

Measurement is completed

ROTARY FOCUSING

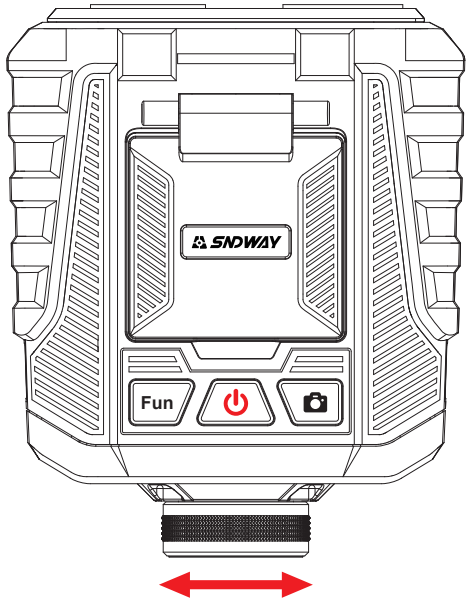

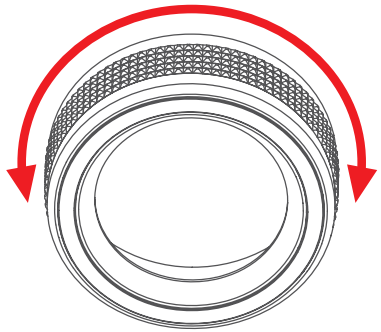

Rotation along the "right" direction is suitable for users who cannot see clearly near (such as the far-sighted), and rotation along the "left" direction is suitable for users who cannot see clearly at a distance (such as the short-sighted). By adjusting the knob to make the eye distance and pupil distance consistent, then the view becomes clear.

MODE SETTING

Short press the Mode key Fun to switch modes.

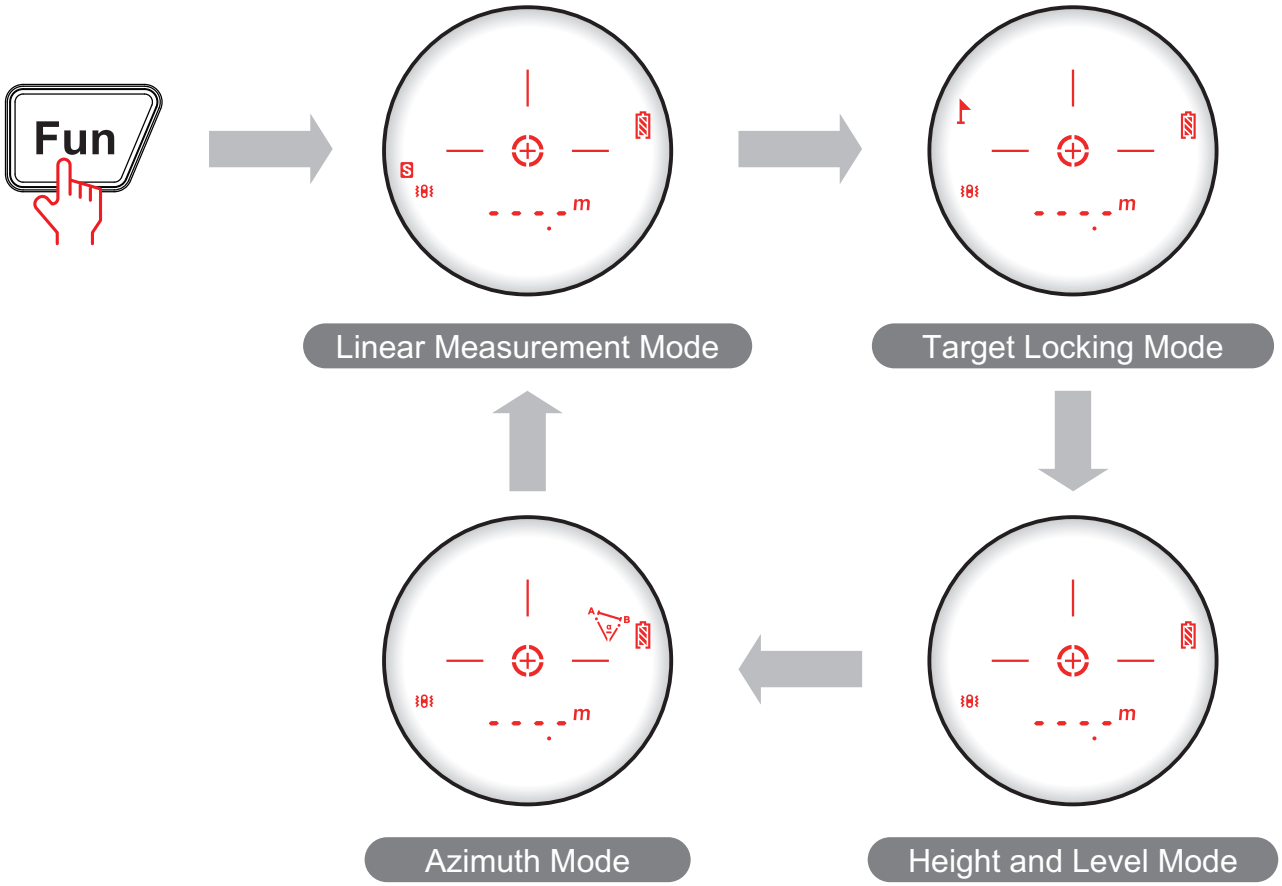

External Screen Display:

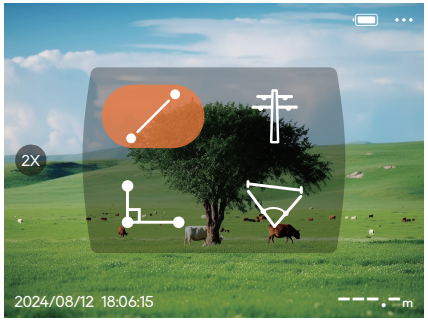

Mode Option

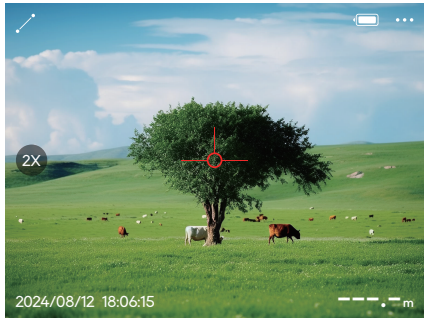

Linear Measurement Mode

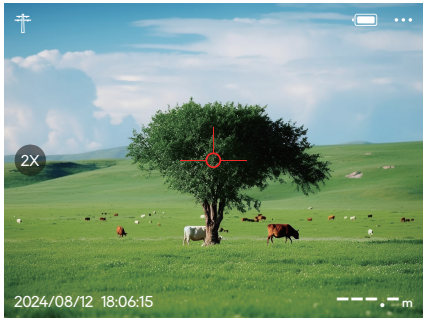

Target Locking Mode

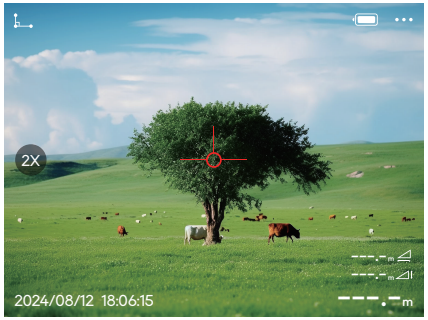

Height and Level Mode



Azimuth Mode

UNIT AND VIBRATION

Long press Fun for mode setting.

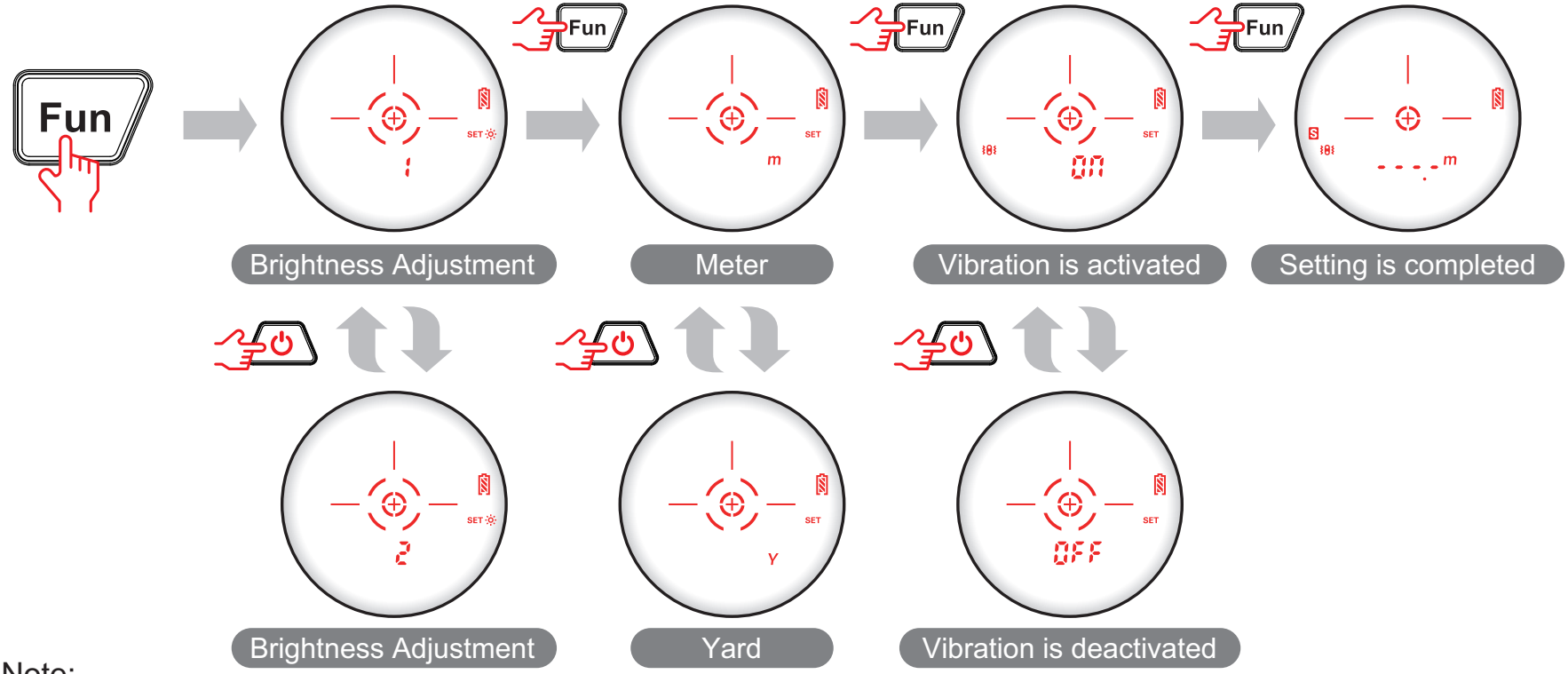

Note:

1. When the Vibration Mode is activated, the product vibrates once when measuring the distance. The product vibrates twice when locking the target.
2. When the Vibration Mode is deactivated, the product does not vibrate when measuring the distance. The product vibrates twice when locking the target.

External Screen Display:

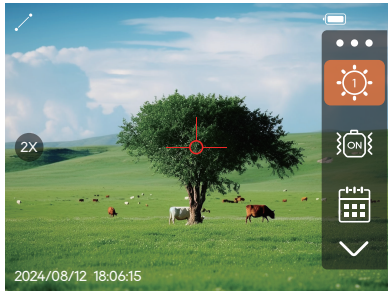

Brightness Adjustment



Vibration is activated

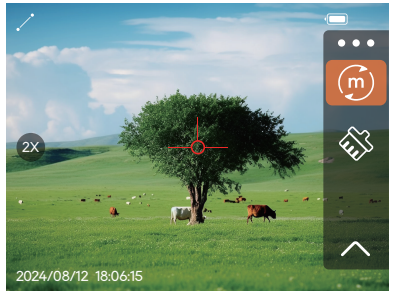

Meter

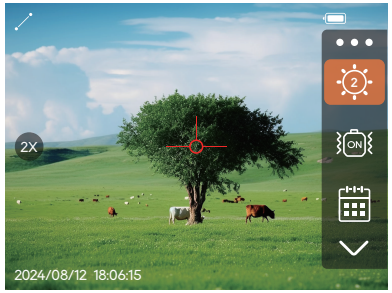

Brightness Adjustment

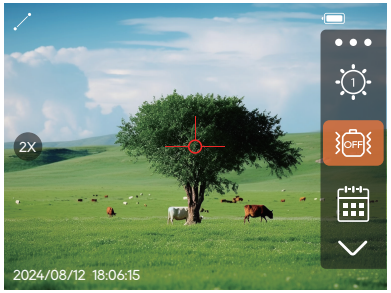

Vibration is deactivated

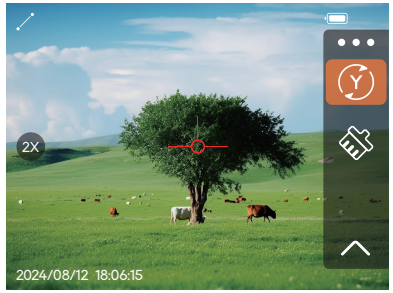

Yard

LINEAR MEASUREMENT MODE

Measure linear distance

Single measurement: short press the measurement key to measure a distance;

Continuous measurement: long press the measurement key to scan the distance and display the scanned target distance in real time.

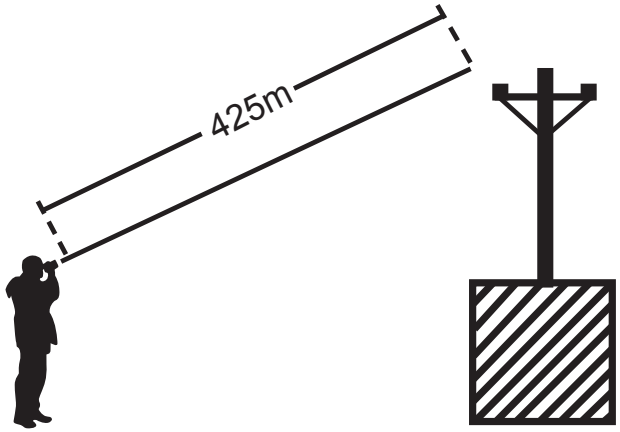

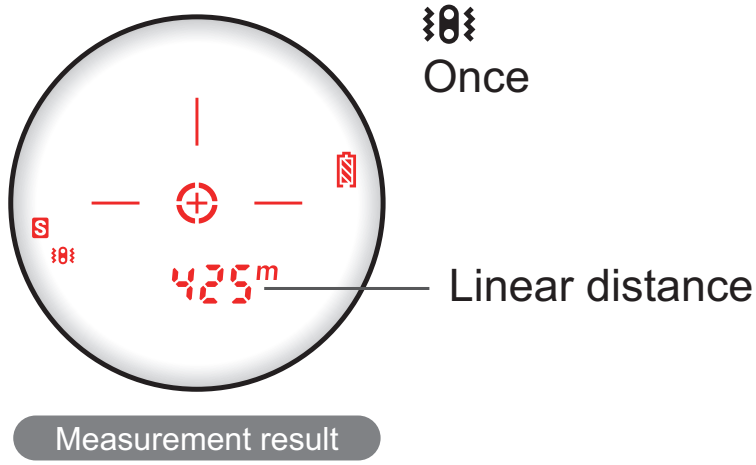

External Screen Display:

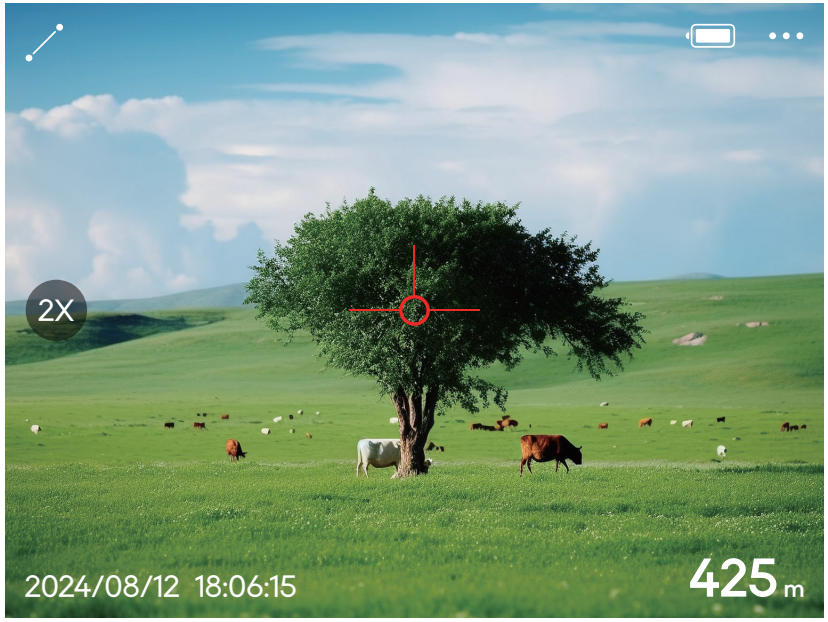

Photo/Video Mode

Short press  **to take a picture; Long press**  **to take a video;**

Long press  **again to stop recording.**

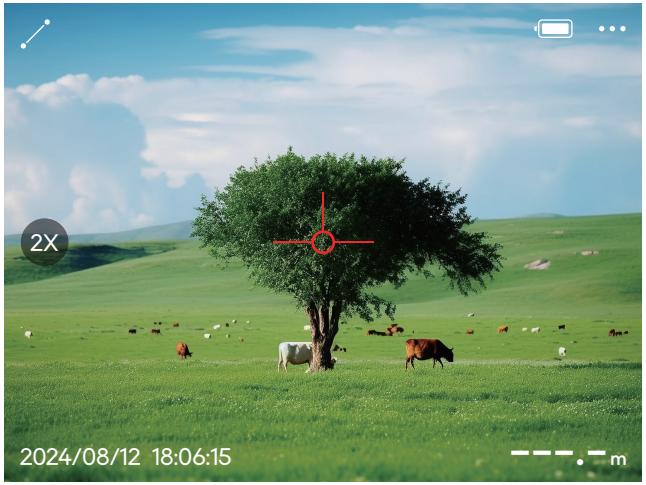

Photo

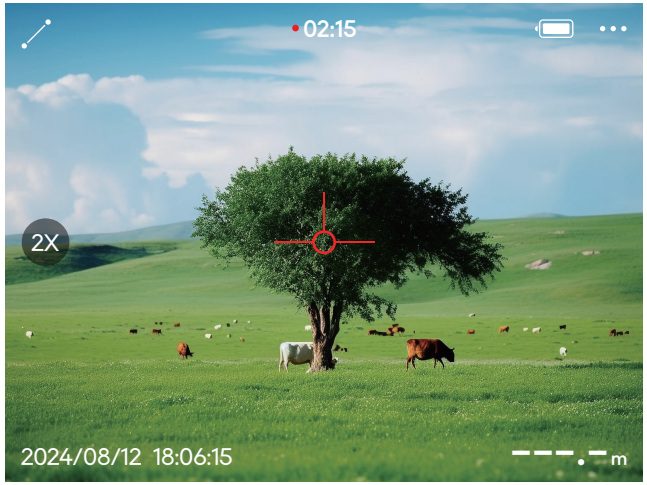

Video

TARGET LOCKING MODE

When measuring overlapping targets, long press the measurement key and slowly scan from left to right to lock the nearest target.

For example, if it has not determined whether the measured target is a flag or a forest behind it, the locking function will lock the nearest target ---- the flagpole.

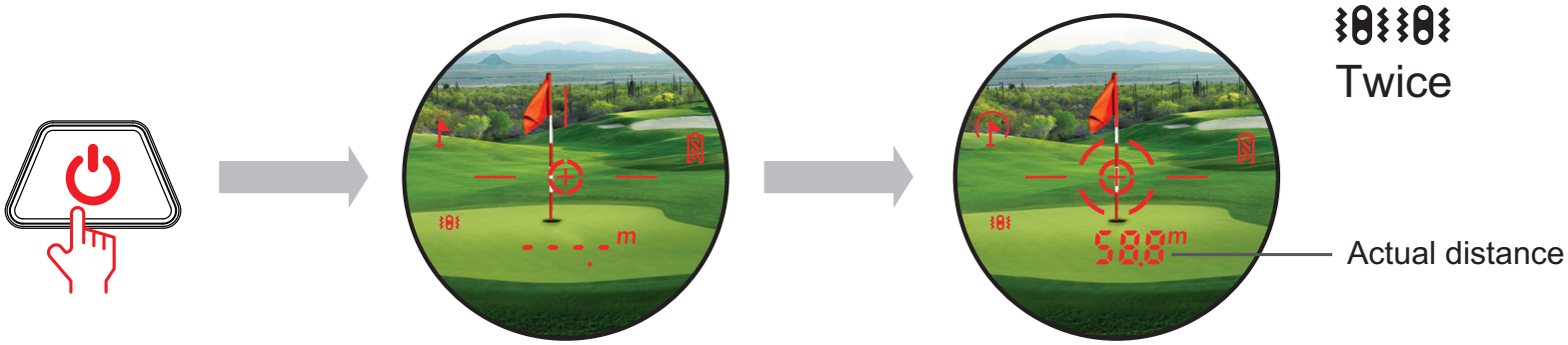

External Screen Display:



HEIGHT AND LEVEL MODE

Short press the measurement key  to display the relative height and horizontal distance from the observer to the target.

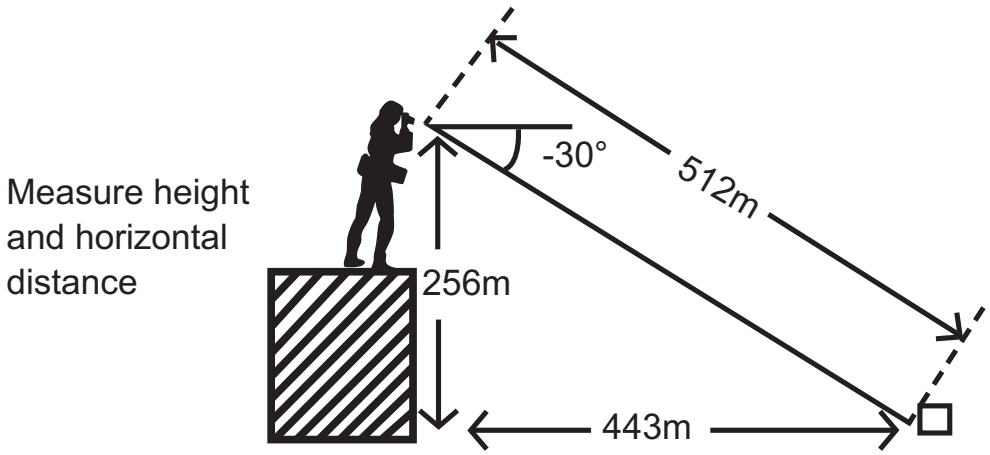

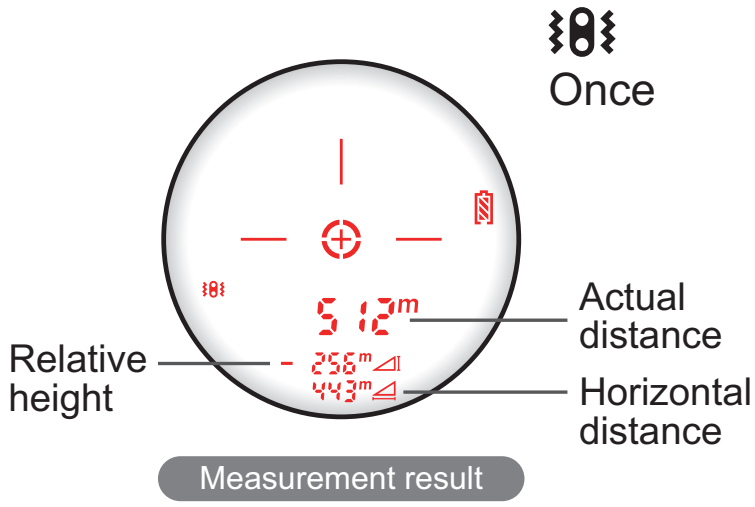

External Screen Display:



AZIMUTH MODE

The Azimuth Mode is used to measure the distance between two targets. First testing at point A, then ranging at point B, and finally automatically calculating the distance between A and B.

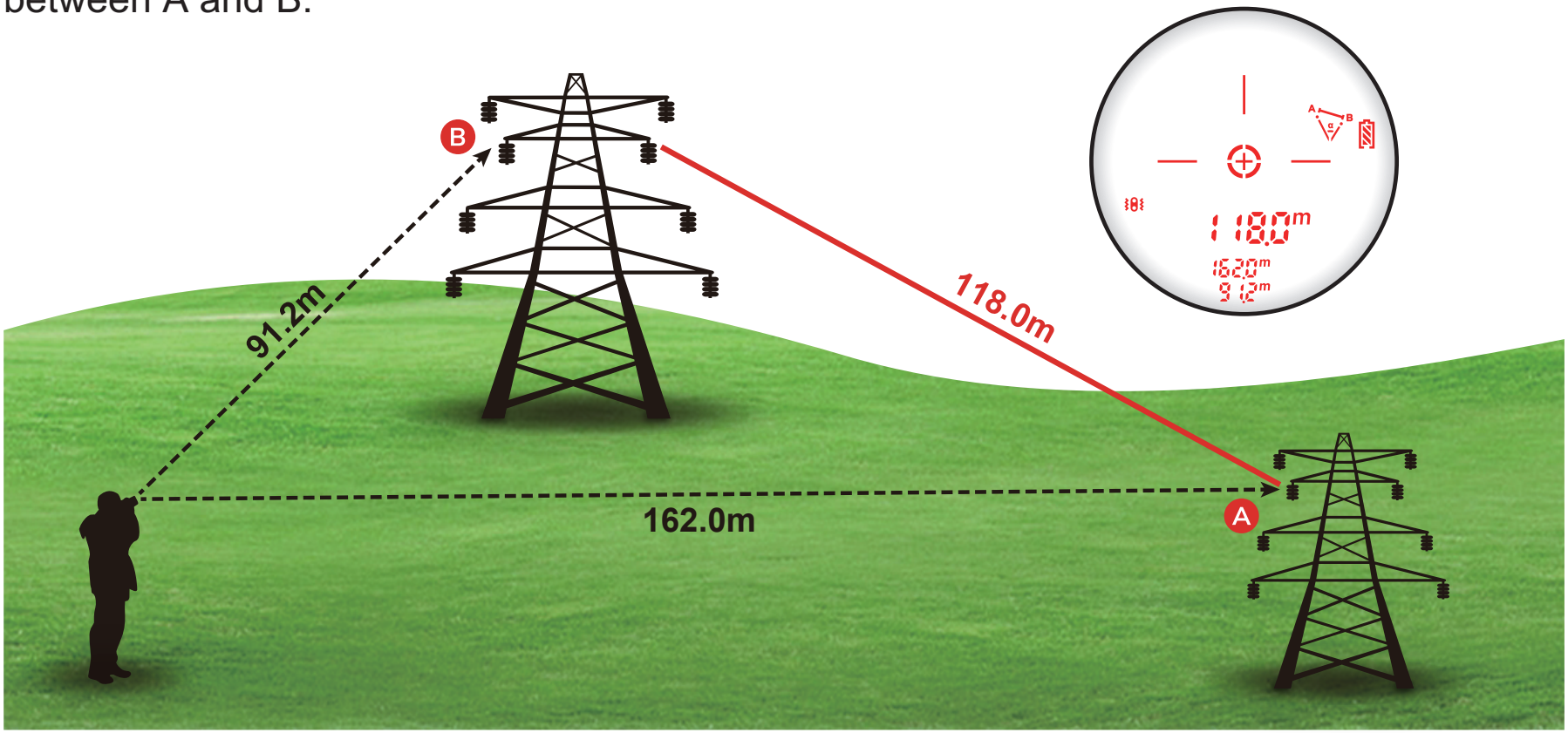

External Screen Display:

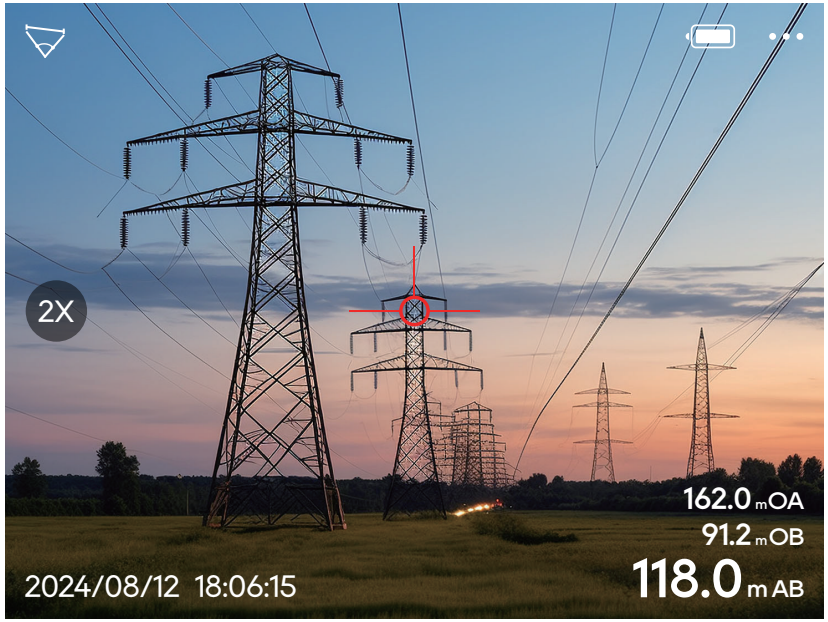

USB Connection

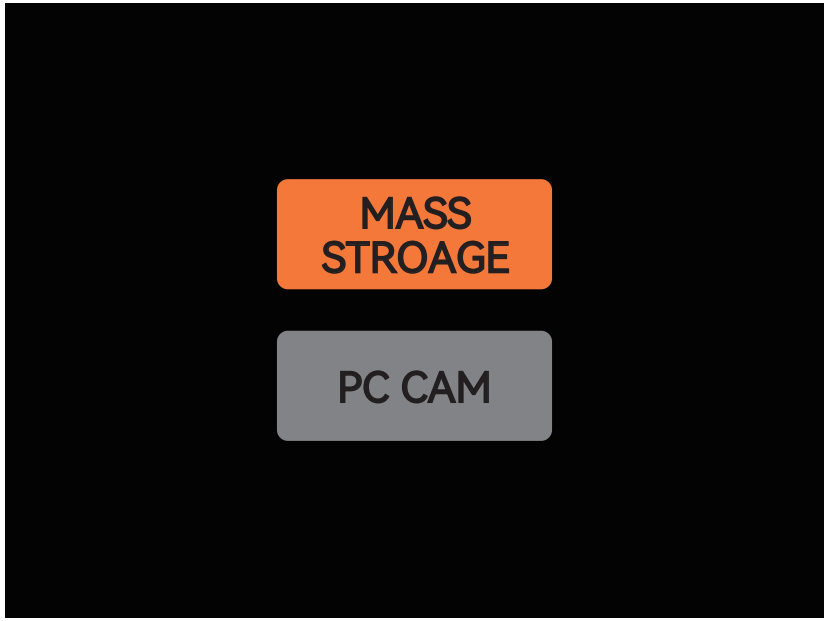

1.Enter the MASS Storage mode

2.Connect the computer via USB and enter the PCCAM mode

THE DEFINITION OF COMMUNICATION LINE

Communication Method	RS232
Synchronization Method	Asynchronous (Response-based)
Baud Rate	115200
Data Bits	8
Stop Bit	1
Check Bit	No
Communication Protocol	Please refer ro "SW3000A_RS232 Communication Developement Guide".
Communication Wiring	①Black.....GND; ②Brown.....RX; ③Blue.....TX

PRECAUTIONS

The multi-functional range finder emits an invisible and non-vision-damaging infrared pulse laser, which is then reflected back from the selected target into the optical receiver. By measuring the time each pulse laser travels from the range finder to the target and back, the system uses an advanced and precise charging circuit to calculate the measured distance in real time. The maximum measurement range depends on the target's reflectivity, color, surface finish size, and actual shape.

The following factors ensure optimal measurement range and accuracy:

- A clear weather
- There are no impurities in the air
- Bright targets
- Targets with highly reflective surfaces
- Targets with a shiny exterior

The following factors do not ensure optimal measurement range and accuracy:

- Black targets
- Small or miniature targets
- Strong light interference/ fierce sunlight
- Snowy, rainy or foggy days
- Targets that need to be measured through glass
- Targets with diffuse reflective surfaces
- Dynamic targets

- When the battery shows [] insufficient power, the battery should be charged in time close the Screen, otherwise the ranging error will increase.
- Do not touch the lens surface with your fingers to avoid damaging the film layer on the lens surface.
- This product is precisely calibrated by precise instruments, do not disassemble at will. If there is a damage, the product should be sent to the special department for maintenance.
- Please gently wipe the lens with a lens cleaning cloth, do not wipe with other objects.
- Avoid collision or heavy pressure when carrying the product.
- Do not allow it to be baked or corroded when carrying or using the product.
- The product should be stored in a dry, cool, ventilated place and avoid direct sunlight, dust and a sudden change in temperature.
- Do not direct the product at the sun or strong light source to emit laser beam, so as not to damage the photosensitive devices in the product.

PACKING LIST

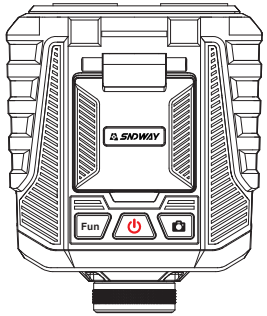

Host



Packing Box



Cloth Bag



User Manual

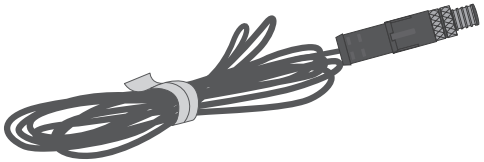

Communication line

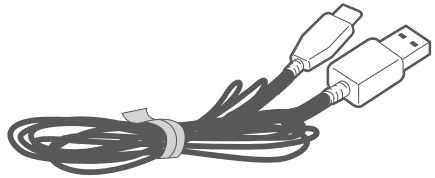

USB Type-C Cable

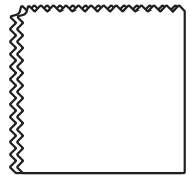

Cleaning Cloth



Shoulder Belt

Operation manual

深达威科技(广东)股份有限公司
Sndway Technology (Guangdong) Co., LTD.
地 址：广东省东莞市虎门镇虎门团结路58号
Add: No.58, Humen Tuanjie Road, Humen Town,
Dongguan City, Guangdong Province, China
全国咨询服务热线 / Service Hotline：400-125-6969
电 话 / Tel：0769-85265688
网 址 / Web：www.sndway.com
邮 箱 / E-mail：market@sndway.com